Preliminary Architectural Feasibility Report

Need for the Facility

The Village of Bear Lake currently has no facility for maintenance and storage of Village equipment. Construction of a new building on the same parcel as the Village salt barn will give the Village maintenance staff a safe and secure area to store and maintain Village equipment. The ability to properly clean, maintain and secure equipment in a safe area will lengthen the lifespan of the equipment while ensuring the safety of the staff. The new construction will include heat, water and accessible restroom facility.

Existing Facilities

There is no existing facility to store, clean and maintain Village owned equipment. Village staff spend extra time looking for tools, finding places to store tools and cannot perform routine maintenance during inclement weather. Exposure to the elements decreases the life expectancy of most Village assets left out in the elements.

Proposed Facility

The proposed facility will insure the safe and timely maintenance of Village equipment by Village staff. Will offer secure storage of equipment, and the ability to work on Village projects in a safe and productive manner, no longer hampered by inclement weather. The building will feature a storage loft for items such as Village owned holiday decorations. This building will also house needed parts and equipment for the Village new water system.

Site Size

Lot size is 280 feet x 185 feet, slightly larger than one acre. The lot sits at the corner of Russell Street and Potter Road in the Village of Bear Lake.

Access to Site

The existing Village salt barn sits on this parcel and the new construction will utilize the same access drive.

Landscaping

The site is level and minimal site grading will be required to site the construction. Existing vegetation is anticipating no impact.

Drainage

The subject property sits at a slightly higher elevation to the Village, and site soils are a loamy mix that provides adequate drainage. No excessive puddling is anticipated to occur during or after construction

Site Suitability

This site, which is owned by the Village is well suited to the proposed use, as the Salt Barn is located here and would facilitate equipment efficiencies during snow season. The newly installed Village water system is also located at this site, and storage of well maintenance parts

and equipment for the system will increase efficiency of monitoring and maintenance. The property adjoining this parcel is owned by Bear Lake School, and plans are being made to convey all lands except an easement to the Village.

Cost Estimates

1.	Development and construction	$260,985
2.	Land and rights	0
3.	Legal	$ 4,000
4.	Architect fees	$ 37,150
5.	Contingencies	$ 26,000
	TOTAL	$328,135

Annual Operating budget

1.	Electric	$2,600.00
2.	Heating Fuel	$4,200.00
3.	Water	$ 540.00
4.	Property Insurance	$ 500.00
5.	Annual maintenance costs capital reserve	$4,000.00
	TOTAL	$11,840.00

Based on 20 yr replacement of the following major systems:

Roof, Interior finishes, Plumbing fixtures, HVAC unit, Generator

Drawings

Foundation Plan
Floor Plan
Preliminary Elevations
Sections & Details

Construction problems

There are no construction problems at this site. The access is good, disruption of the neighborhood is negligible, and the site history is known by the local elected officials and Village management.

Conclusion and Recommendations

The site, being owned by the Village and containing other Village assets, makes this the perfect location to construct a DPW building. The overall savings to the Village by time efficiency of workforce and extended use of Village owned equipment, while not easy to quantify, will have a financial impact over time.

This building, being a new construction and following all appropriate codes will create a safe workspace for Village employees to clean and maintain Village equipment, thereby extending the useful life of assets. The workforce will have a safe, clean environment to work in during inclement weather, saving money by eliminating the down time due to weather.

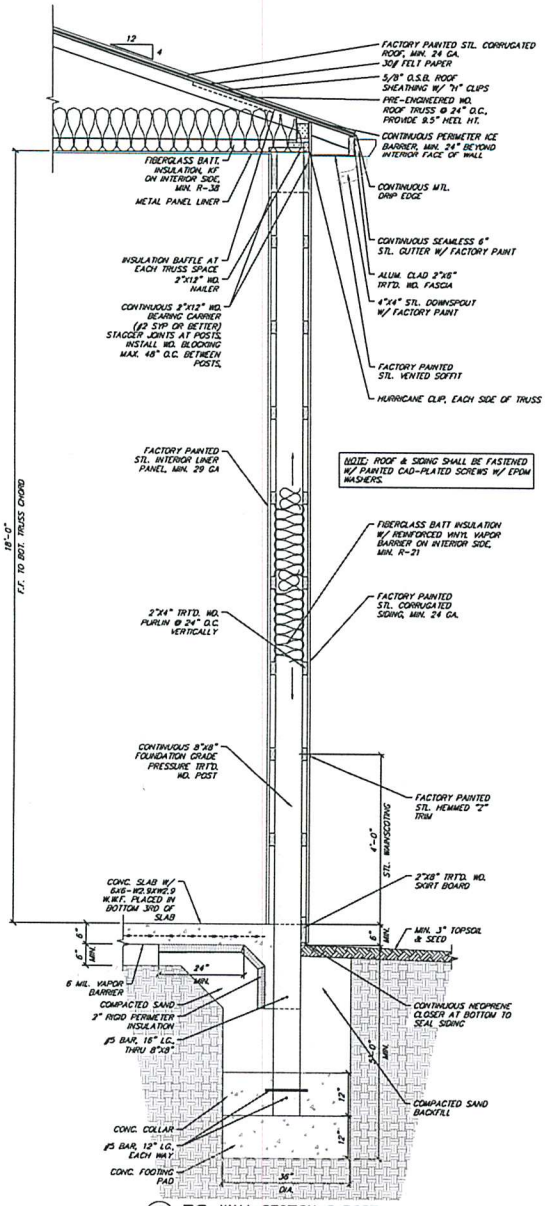

3/A5 TYP. WALL SECTION @ POST
SCALE: 3/4" = 1'-0"

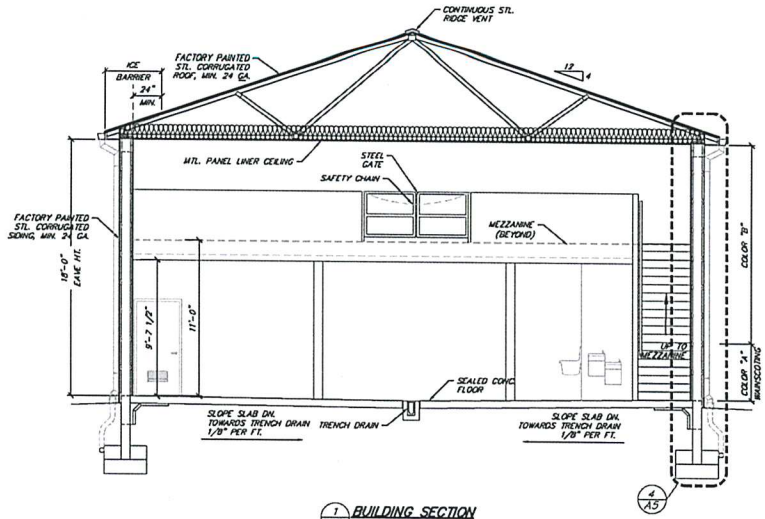

1/A5 BUILDING SECTION
SCALE: 1/4" = 1'-0"

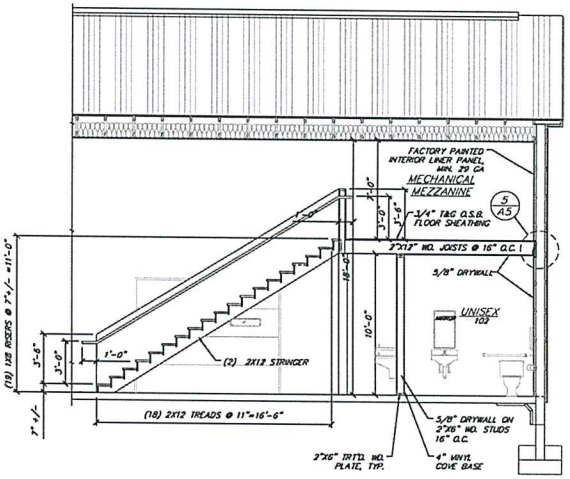

2/A5 BUILDING SECTION
SCALE: 1/4" = 1'-0"

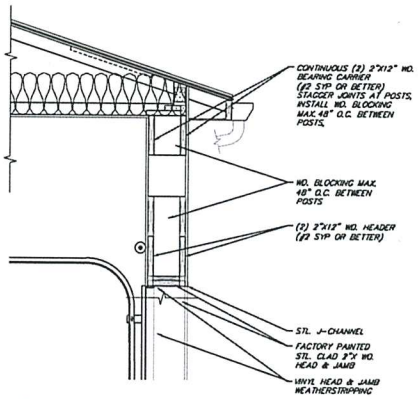

4/A5 TYP. OVERHEAD DOOR DETAIL
SCALE: 3/4" = 1'-0"

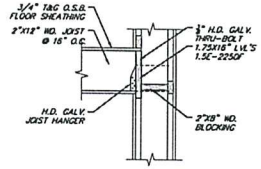

5/A5 DETAIL
SCALE: 3/4" = 1'-0"

BY	MARK	REVISIONS	DATE

THE WORK REPRESENTED BY THIS DRAWING WAS DESIGNED BY THE ENGINEER FOR THIS SPECIFIC APPLICATION AND SPECIFIC LOCATION DESCRIBED HEREON IN ACCORDANCE WITH PROFESSIONAL STANDARDS PREVALENT AT THE TIME THE DESIGN WAS DONE. THE ENGINEER DOES NOT GUARANTEE AND WILL NOT BE LIABLE FOR ANY OTHER LOCATION, CONDITION, DESIGN OR PURPOSE.

VILLAGE OF BEAR LAKE
NEW DPW GARAGE

SECTIONS & DETAILS

Spicer group
SAGINAW OFFICE
230 S. Washington Ave.
Saginaw, MI 48607
Tel. 989-754-4717
Fax. 989-754-4440
www.SpicerGroup.com

DE. BY: DSB CH. BY: DSB
DR. BY: EDH APP. BY: RRE
PROJECT NO. 123591SG2016
STDS.
SHEET 8 OF 12
A 5
DATE JUNE, 2016
SCALE AS NOTED
FILE NO. DA-1294-08

PLOTTED SCALE: 1=1 RCT F.B. P.C. ACAD FILE: DA1294**

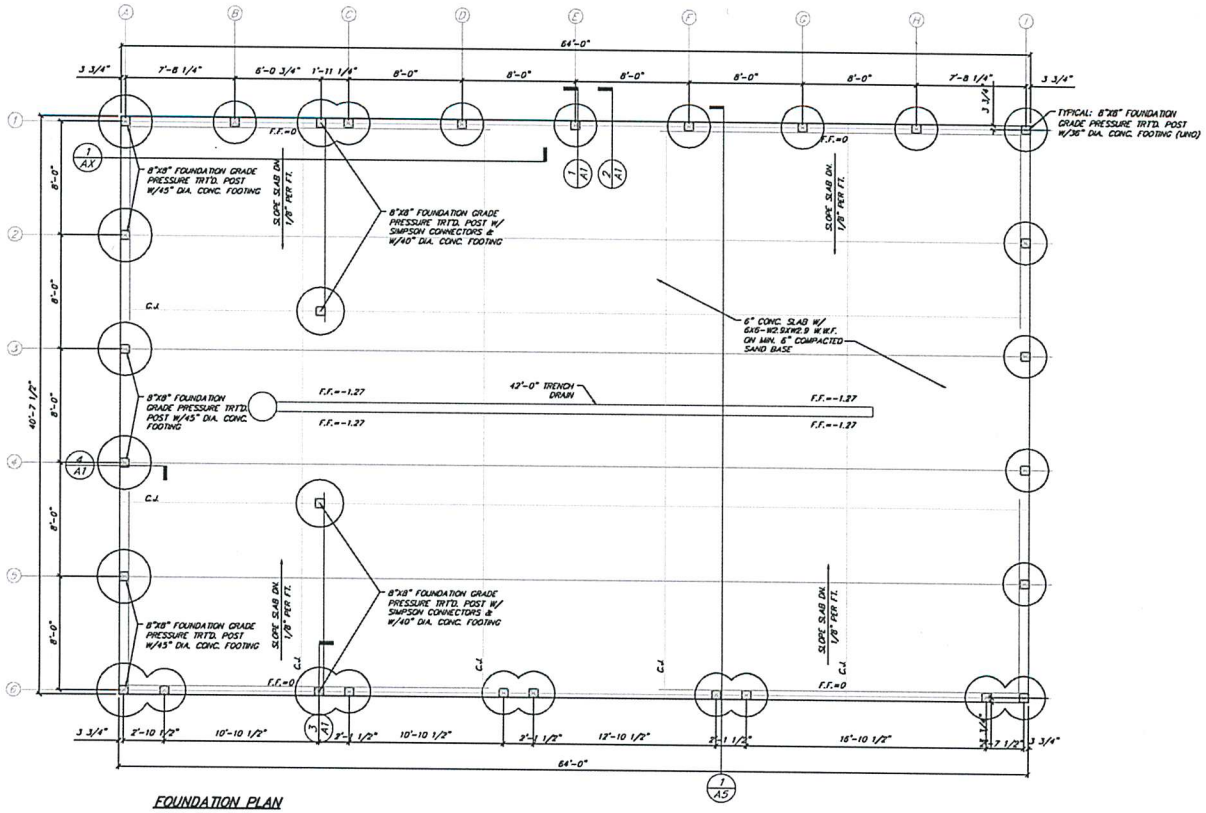

FOUNDATION PLAN

SCALE: 1/4" = 1'-0"

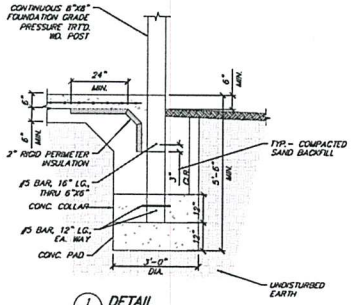

1/A1 DETAIL

SCALE: 1/2" = 1'-0"

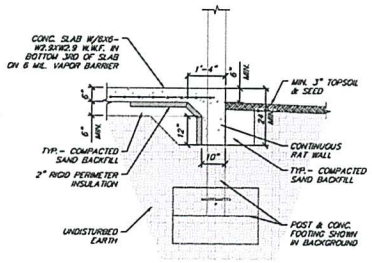

2/A1 DETAIL

SCALE: 1/2" = 1'-0"

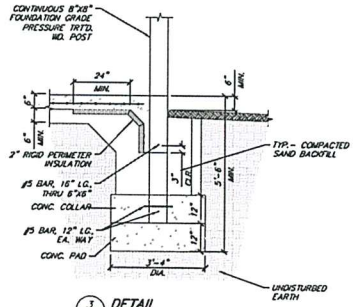

3/A1 DETAIL

SCALE: 1/2" = 1'-0"

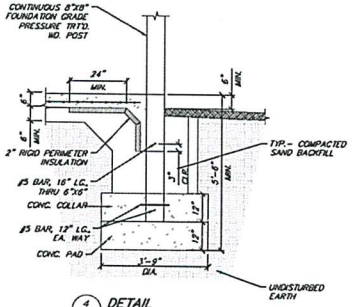

4/A1 DETAIL

SCALE: 1/2" = 1'-0"

BY	MARK	REVISIONS	DATE

THE WORK REPRESENTED BY THIS DRAWING WAS DESIGNED BY THE ENGINEER FOR THIS SPECIFIC APPLICATION AND SPECIFIC LOCATION DESCRIBED HEREON IN ACCORDANCE WITH THE CONDITIONS PREVALENT AT THE TIME THE DESIGN WAS DONE. THE ENGINEER MAKES NO REPRESENTATIONS AND WILL NOT BE LIABLE FOR ANY OTHER LOCATION, CONDITION, DESIGN OR PURPOSE.

VILLAGE OF BEAR LAKE
NEW DPW GARAGE

FOUNDATION PLAN

Spicer group
SAGINAW OFFICE
330 S. Washington Ave.
Saginaw, MI 48607
Tel. 989-754-4717
Fax. 989-754-4440
www.SpicerGroup.com

DE. BY: DSB	CH. BY: DSB	PROJECT NO. 123591SG2016
DR. BY: EDH	APP. BY: RRE	
STDS.	SHEET 4 OF 12	A 1
DATE JULY, 2016	FILE NO. DA-1294-04	
SCALE AS SHOWN		

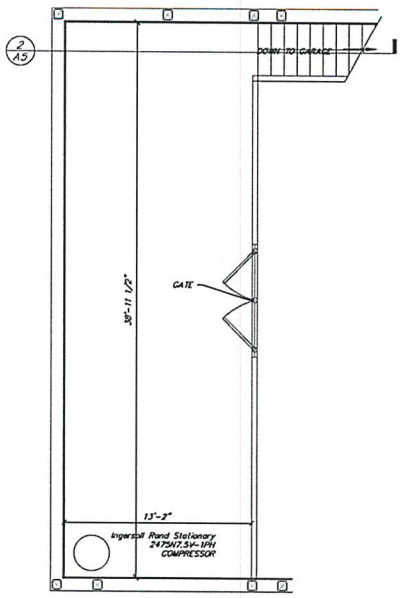

MEZZANINE PLAN
SCALE: 1/4" = 1'-0"

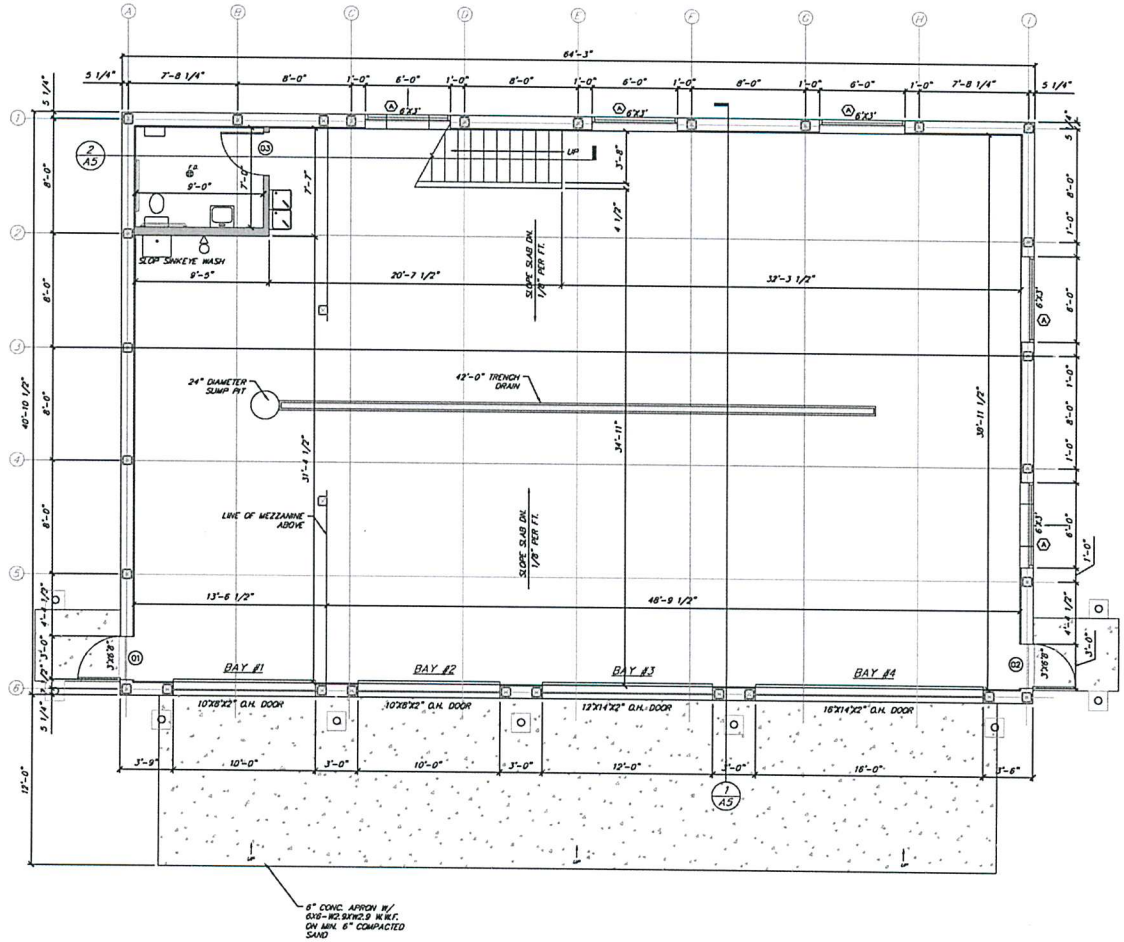

FLOOR PLAN
SCALE: 1/4" = 1'-0"

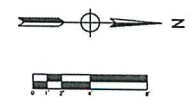

BY	MARK	REVISIONS	DATE

THE WORK REPRESENTED BY THIS DRAWING WAS DESIGNED BY THE ENGINEER FOR THIS SPECIFIC APPLICATION AND SPECIFIC LOCATION DESIGNED HEREON IN ACCORDANCE WITH THE CONDITIONS PREVALENT AT THE TIME THE DESIGN WAS DONE. THE ENGINEER DOES NOT GUARANTEE AND WILL NOT BE LIABLE FOR ANY OTHER LOCATION, CONDITION, DESIGN OR PURPOSE.

VILLAGE OF BEAR LAKE
NEW DPW GARAGE

FLOOR PLAN

Spicer group
SAGINAW OFFICE
230 S. Washington Ave.
Saginaw, MI 48607
Tel. 989-754-4717
Fax. 989-754-4440
www.SpicerGroup.com

DE. BY: DSB DR. BY: EDH	CH. BY: DSB APP. BY: RRE	PROJECT NO. 123591SG2016	
STDS.		SHEET 5 OF 12	A 2
DATE JUNE, 2016 SCALE 1/4" = 1'-0"		FILE NO. DA-1294-05	

PLOTTING SCALE: 1=1 RET. FB. PR. ACAD FILE: DA1294-05

40 x 60

EAST ELEVATION
SCALE: 1/4" = 1'-0"

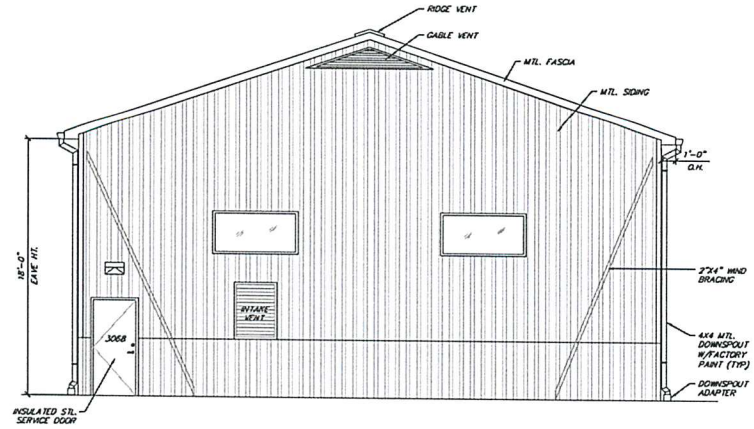

NORTH ELEVATION
SCALE: 1/4" = 1'-0"

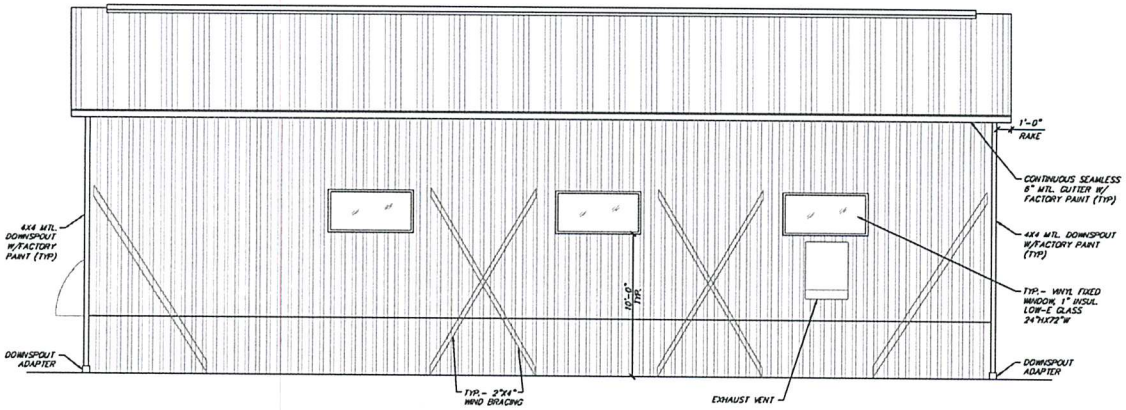

WEST ELEVATION
SCALE: 1/4" = 1'-0"

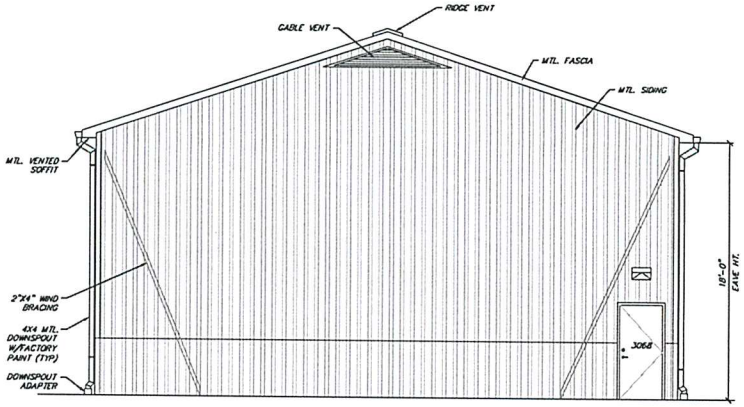

SOUTH ELEVATION
SCALE: 1/4" = 1'-0"

BY	MARK	REVISIONS	DATE

THE WORK REPRESENTED BY THIS DRAWING WAS DESIGNED BY THE ENGINEER FOR THIS SPECIFIC APPLICATION AND SPECIFIC LOCATION DESIGNATED HEREON IN ACCORDANCE WITH THE CONDITIONS PREVALENT AT THE TIME THE DESIGN WAS DONE. THE ENGINEER DOES NOT GUARANTEE AND WILL NOT BE LIABLE FOR ANY OTHER LOCATION, CONDITION, DESIGN OR PURPOSE.

VILLAGE OF BEAR LAKE
NEW DPW GARAGE

PRELIMINARY ELEVATIONS

Spicer group
SAGINAW OFFICE
330 S. Washington Ave.
Saginaw, MI 48607
Tel. 989-754-4717
Fax. 989-754-4440
www.SpicerGroup.com

DE. BY: DSB	CH. BY: DSB	PROJECT NO.	
DR. BY: EDH	APP. BY: RRE	123591SG2016	
STDS.		SHEET 6 OF 12	A
DATE JULY, 2016		FILE NO.	3
SCALE 1/4" = 1'-0"		DA-1294-06	

PLOTTING SCALE: 1=1 RET. F.B. PG. ACAD FILE: DA1294**